Flymo

MODEL	L38
PRODUCT NO.	9630146

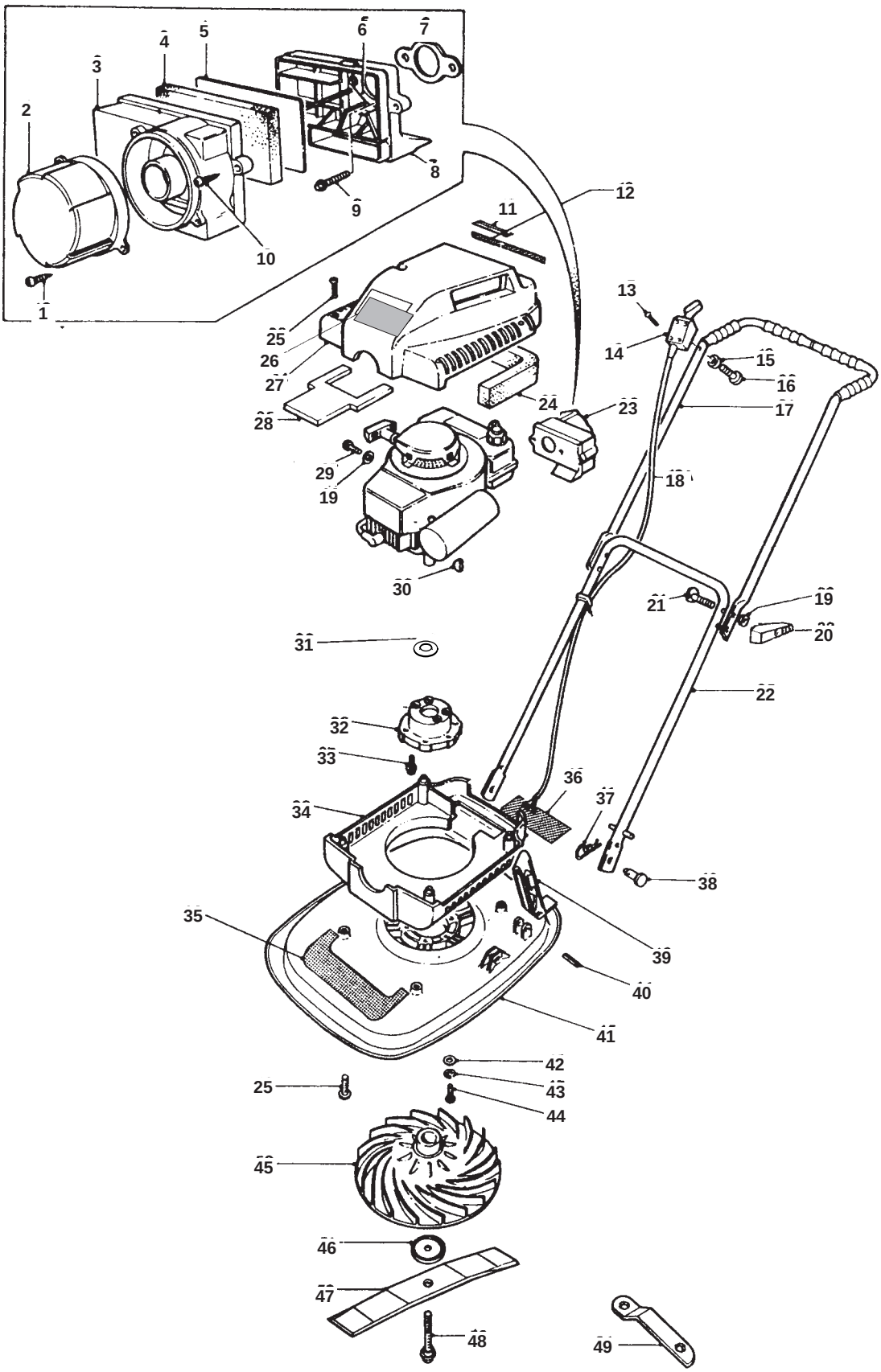

Flymo

MODEL	L38
PRODUCT NO.	9630146

1

KEY	PART NUMBER	DESCRIPTION	QTY	
01	5140866-00/4	SCREW	2	
02	5126163-04/6	CAP,INTAKE	1	
03	5126077-03/0	FILTER RETAINER	1	
04	5141659-01/0	FILTER,FOAM	1	
05	5141660-00/0	FILTER,CLOTH	1	
06	5141685-00/7	SPACER	1	
07	5141686-00/5	GASKET	1	
08	5120377-04/8	FILTER HOUSING	1	
09	5141687-00/3	SCREW	2	
10	5146045-01/7	SCREW	2	
11	5149172-00/8	LABEL,FUEL MIXTURE	1	
12	5137535-00/0	LABEL,CHOKE/SHUT OFF	1	
13	5140508-00/2	SCREW	4	
14	5136499-02/6	SWITCH & CABLE	1	
15	5146338-00/8	WASHER	1	
16	5146731-00/4	SCREW	1	
17	5116120-16/2	HANDLE,UPPER,C/W GRIP	1	
18	5140510-05/7	CABLE	1	
19	5140266-00/7	WASHER	3	
20	5137679-00/6	WING KNOB	2	
21	5148672-00/8	HANDLE BOLT	2	
22	5126696-06/0	HANDLE,LOWER	1	
23	5110407-04/5	TURBO FILTER ASSY	1	
24	5146580-01/3	FILTER	1	
25	5146045-03/3	SCREW	8	
26	5149111-00/6	LABEL,UPPER COWL	1	
27	5106192-68/4	COWL,UPPER	1	
28	5126533-00/8	INSULATION,UPPER COWL	1	
29	5146329-00/7	SCREW	1	
30	5140053-00/9	KEY	1	
31	5141737-03/0	PROTECTION SLINGER	1	
32	5116765-00/8	ADAPTOR PLATE	1	
33	5141557-00/8	SCREW	4	
34	5106193-04/7	COWL,LOWER	1	
35	5126598-01/9	LABEL,FLYMO	1	
36	5146485-00/7	LABEL,WARNING	1	GB.
	5138216-00/6	LABEL,WARNING	1	F.B.NL.A.D.CH.E.P.I.GB.
	5138217-00/4	LABEL,WARNING	1	N.DK.S.SF.
37	5140423-00/4	PIN,RETAINING	2	
38	5140092-03/1	PIVOT PIN	2	
39	5116388-04/1	LEVER,UP STOP	1	
40	5147029-01/0	ROLL PIN	1	
41	5147924-12/9	HOOD ASSY C/W UPSTOP	1	
42	5146309-00/9	WASHER	6	
43	5147524-00/2	WASHER,SPRING	6	
44	5141585-01/7	SCREW	6	
45	5116968-00/8	IMPELLER	1	
46	5140001-00/8	BLADE SPACER	3	
47	5130225-01/3	BLADE 38CM	1	
48	5146677-04/1	BLADE BOLT	1	
49	5130109-00/1	SPANNER	1	

PRODUCT APPLICATION

9630146-51 GB
9630146-52 A.B.CH.F.NL.
9630146-53 N.DK.S.SF.
9630146-54 E.P.I.
9630146-57 F.B.NL.A.D.CH.E.P.I.GB.

WHERE NO APPLICATION DETAILS ARE SHOWN, PART APPLIES TO ALL COUNTRIES
A Austria; AUS Australia; B Belgium; CND Canada; CH Switzerland; D Germany; DK Denmark; E Spain; EI Eire; F France; GB Great Britain; I Italy; N Norway; NL Netherlands; NZ New Zealand; O/S Overseas; P Portugal; S Sweden; SF Finland; USA America; ZA South Africa